International Journal of Business and Society, Vol. 19 S4, 2018, 554-573

THE U-SHAPED RELATIONSHIPS BETWEEN BUSINESS UNITS' STRATEGY, USE OF ACCOUNTING PERFORMANCE MEASURES AND BUDGETARY SLACK

Fuad♣
Universitas Diponegoro

Daljono
Universitas Diponegoro

Dwi Ratmono
Universitas Diponegoro

ABSTRACT

Budgetary slack has been debated over the last two decades among the accounting behaviorists and economists regarding the performance consequences and its determinants. Current study provides a conclusive finding as a way out of the unsolved debate among those views by testing the non-linear effects of strategic and financial control determinants of budgetary slack. Using the sample from Indonesian Business Units and thorough analyses using non-monotonic structural equation modeling we found the presence of (inverse) U-shaped relationships between those strategies on reliance on accounting performance measures and budgetary slack.

Keywords: Business unit strategy; Diversification; Reliance on accounting performance measures; Budgetary slack; Polynomial structural equation modeling

1. INTRODUCTION

Current study explores the presence of non-monotonic relationships among the antecedents and dysfunctional outcome (budgetary slack) of reliance on accounting performance measure. The non-linear relation may act as an alternative solution when prior theories fail to acknowledge the real pattern of the relationships. The proposed non-linear relation in particular could be observed on the determinants of budgetary slack that remains unsolved puzzle in management accounting research (Hartmann and Maas 2010).

Budgetary slack has been defined as the corporate intentional behavior to lower the performance targets below their actual levels (Langevin and Mendoza 2013, Webb 2002), despite the fact that variations may always occur in expected-actual relations (Kihn 2011). Yet, prior research is inconclusive in identifying the effectiveness and benefit of the use of budgetary slack (Dunk and Nouri 1998) that may possibly lead to the misspecification of the model developed (Chenhall2003). For example, taking a positive view, behaviorists have suggested that slack creation may be used

♣Department of Accounting, Faculty of Economics and Business, Universitas Diponegoro, Jl. Prof. Soedarto, SH., Tembalang, Semarang, Indonesia, Email: fuad@live.undip.ac.id, Tel:62-24-76486851

as a hedge against environmental pressures (Huang and Li 2012, Yang et al. 2009; Chen and Huang 2010, Stede 2001, Chen et al. 2013, Cyert and March 1963), as a shock absorber (Mellahi and Wilkinson, 2010), and as a cushion to engage in risk taking/innovative behavior (Herold et al. 2006, Elmassri and Harris 2011, Love and Nohria 2005). In a strategic management literature, slack is important in providing managers some flexible resources to engage in activities that are difficult for companies with limited resources (Nohria and Gulati 1996). In a similar vein, George (2005) maintained that slack resources can assist the companies in implementing their strategies. Lawson (2001) argued that the attempt to reduce slack should be prevented as it is needed by the organization. Martinez and Artz (2006, p.12) further stated, in a more provoking argument, that "it is not possible for a firm to survive long without the presence of resources above and beyond its immediate needs".

On the other end of the views, the economists maintained that slack creation is destructive and therefore should be reduced, if not eliminated.Yasai-Ardekaini (1986) and Bourgeois (1981) argued that the presence of slack may create the less optimal systems, processes and structures that may reduce the tendencies of the firms to explore new possibilities. Similarly, Jensen (1986, 1993) and Jensen and Meckling (1986) insisted that slack may lead to waste in R&D investment and may inhibit the innovative ideas. Furthermore, Bourgeois (1981) and Yasai-Ardekani (1986) documented that the presence of slack assist in the creation of sub-optimal processes and systems that may inhibit the firms' aggressive explorations of new responses. Hartmann and Maas (2012, p. 31) also noted that budgetary slack is usually created for those "who have stronger tendency to opportunisitically take actions that benefit themselves".Cheng and Kesner (1997) argues that literally, slack is perceived as negative and should be reduced. Lack of consensus on conceptualization of budgetary slack can be regarded as the cause of the inconclusive empirical evidences. Lack of consensus is also deteriorated by the fact that limited studies have tried to figure out how the situational factors such as business unit strategy and corporate diversification, and budgetary control affect slack (Merchant 1985, Stede 2001, Hartmann and Maas, 2010).

The studies (please compare the findings of Elmassri and Harris 2011, Hartmann and Maas 2010, Kihn 2011, Stede 2000, 2001, Langevin and Mendoza 2013, Dunk 1993, Chen 2013, Lau 1999, Linn et al. 2001 among others) again stand divided on whether those situational factors and budget emphasis inhibit or encourage slack creation in the business units. This impasse (i.e. lack of conclusive, robust evidences) raises the research questions that are the heart of this study. We try to to reconcile those theoretical and empirical debate by examining whether the effects of business unit strategy and diversification on reliance on accounting performance measures and budgetary slack are curvilinear. First, does Prospector-like strategy diminishes or facilitates reliance on accounting performance measures that may lead to slack creation? Prior literature however, have not conclusively argued that whether prospector strategy can in fact increase slack creation. Second, does the presence of slack can be explained by a large extent of subsidiaries so that the control by corporate become lax? Or whether this slack is the result of management consciousness to let the slack exist in a less diversified firms, in order to facilitate the risk-taking and innovative behavior (Herold et al. 2006, Love and Nohria 2005). Or, can we reconcile those views by proposing non monotonic relationship? Third, does higher reliance on accounting performance measure affect slack creation activities? To the best of our knowledge, no research has scrutinized the polynomial relationships between diversification, strategy, reliance on accounting performance measures and budgetary slack.

This research provides a comprehensive and significant contribution in management accounting literature that takes a step forward to address the gaps, by assessing whether the existence of slack is present due to different types of environment characteristics (e.g. prospector vs. defender type strategy; highly diversified vs. less diversified firms) and/or due to the extent of reliance on accounting performance measure. The study contributes to literature on slack as well. Researchers have debated on how budgetary slack is affected by environmental characteristics and budget emphasis, resulting on falsifiable theories among agency and organizational theories. Thus, this study provides a way out of the claims by examining the polynomial relationships between situational factors, reliance on accounting performance measures and budgetary slack.

The remainder of this paper is structured as follows. We developed the hypotheses concerning the non-monotonic role of situational factors on budget emphasis and budgetary slack using previous literature and empirical evidences. We then proceed in section three to present the method of the study, develops the measures and data analysis. Section four comprehensively analyzes the results of present study and section five discusses its findings. Conclusions, limitations and future research are discussed in the last section of this paper.

2. HYPOTHESES DEVELOPMENT

2.1. The inverse U-shaped relationship between Strategy, Reliance on Accounting Performance Measures, and budgetary slack

The potential for firms to create competitive advantages through choosing “the right” business unit strategy has long been a central topic in business literature (Kaplan and Norton 2008). Research in the area however, mainly focuses on the “perfect fit” between strategy and management control systems, particularly on how the strategy and control system can be jointly used to achieve superior performance.

The business unit strategy concern with how it competes with its industry and positions itself in the particular industry. Two well-known business strategies are the Porter (1980, 1985) three generic strategies: differentiation, cost-leadership and focus, while Miles and Snow (1978) expressed the strategies as Prospectors, Defenders and Analyzers. Porter’s cost-leadership (differentiation) strategy is comparable with Miles and Snow’s defender (prospector) strategy. Cost-leadership mainly focus on cost-reduction, creating standardized products and lack of variability, exploit economies of scale (although less emphasis put on premium selling price per unit) and by any means try to be superior on cost-reduction relatively to its industry. On the other hand, Differentiation tends to create unstandardized, “customized” products and try to impose its “unique” products on terms of product features and customer service. Therefore, the differentiation companies tend to excel on the innovation and research and development activities. Differentiation strategy comprises of higher risk taking activities that, failure to do so will be most likely to harm to the overall firm performance. The way business unit competes in its market by pursuing either one strategy has been widely accepted to influence the design of management control systems.

However, there is a consensus among researchers that that Defender strategy is best-suited with the cost control rather than the Prospector. Miles and Snow (1978) maintained that this can be achieved on the way the Defenders translated the cost objectives into specific operating goals. In

contrary, the objectives of the Prospector companies tend to be in the long term, and the matching between the cost and financial objectives can be achieved in the one year accounting period. As a consequence, the reliance on accounting performance measures for the Prospectors may not be optimal for those firms (Stede, 2000, 2001). Interestingly, Simons (1987, 1988) maintained that uniform financial control systems and frequent reporting were higher in the prospectors rather than defenders.

This study also argues that the choice of defender *vis a vis* prospector is mutually exclusive; and one strategy choice supersedes another. It is interesting to note that Simons (1987, 1988) findings and their counterparts (e.g. Govindarajan 1988, Stede, 2000, 2001) may reveal the existence of U-Shaped relationship. In other words, higher reliance on accounting performance measures will be highest in both defender and prospector. Defender may employ tight budgetary controls since efficiency and cost monitoring are important (Langfield-Smith, 1997). Besides, control systems including reliance on accounting (budget) as the performance measures are more robust in the face of low uncertainty as to be the case of defenders (Dunk, 2011). This negative relation will peak and turns to positive however, while Prospectors, as been argued by Dent (1990), may also employ budgetary control systems intensively because formal monitoring and control are needed in the high environmental uncertainty. When business units decide to innovate and enroll in risk taking activities, budget may lose its relevance and emphasis on budgetary control may become lax. Therefore, it is reasonable to predict that

H_1 : a U-shaped relationship exists between strategy and reliance on accounting performance measures

In a budgeting context, slack is created by building excess requirement for resources into a budget or understate productive capability (Yuen, 2004), which is considered as inefficiency and waste (Garrison, et al. 2006, Davis et al. 2006). Slack as previously pointed out however, may also beneficial and desirable for implementing strategic actions and to absorb the shocks of environment turbulence.
Merchant (1985) argued that the main attribute of the defender companies to set accurate budgeting numbers and precise performance measures are the key points to reduce the slack. The environment in which prospectors operate however, make it difficult for corporate management to detect it. On the other hand, it also has been claimed that prospector deals with more uncertainty and volatility in their environment, and thus, one way to choke for uncertainty is through slack creation (Martinez and Artz, 2006).

Furthermore, many notable researches that have linked the strategic implementations and slack maintained that slack may act as "buffer" and thus may be beneficial by promoting a culture of experimentation(O'Brien, 2003, Cyert and March, 1963).Similarly, the inherent nature of slack resources may induce firms to be more actively enganged in risk taking and/innovative behavior (Herold et al. 2006, Greve 2003, O'Brien 2003, Sidhu et al. 2003).

When the firms support the programs to promote activities to aggressively expand the market, or simply to create the unique product, the higher level of slack resources will be needed to fund the projects (Mariadoss et al. 2014). However it is very likely that there is a limit in this positive relationship. As been discussed by Nohria and Gulati (1996), when the firm aggresively execute the riskier investments, the presence of slack will increase. The needs to create more slack will be

decline, however, as the investment and and the projects will be much riskier. The managers may be more inclined to be focusing the measurable, short-term performance rather than focusing on the needs to accumulate slack. Therefore, as strategy rises beyond some point to the prospector-like, the presence of slack will decline (Geiger and Gashen, 2002). Thus, the arguments above lead to the expectation that:

H_2: an inverted U-shaped relationship exists between strategy and budgetary slack

2.2. U-Shaped Relationship between Diversification, Reliance on Accounting Measures and Budgetary Slack

Diversification can be defined as firm's expansion from the core business into other product markets (Andrews, 1980). Diversification broadens the managerial control and increases the information processing capacity as the number of business units to be controlled by corporate also increases. In order to overcome the information overload to be processed, the corporate can invest in the costly information systems or use the accounting information as a performance management systems. Stede (2001) argued and found that the latter is more preferable. Moreover, since corporate management in diversified firms have little knowledge of business units' activities, corporate may use the accounting information to measure business units performance. Merchant (1981) also found that more diversified firms can rely on the administrative controls and budgets. Bruns and Waterhouse (1975) also proposed the use of administrative systems in the more diversified firms.

This positive relationship may reach its highest peak when, to some extent, the corporate expand its business units and products and thus boost the innovative and risk-taking activities. Innovative and risk taking companies may not rely too much on the use of accounting performance measures as it will choke for firms' agressive innovativeness. It is interesting to consider the presence of inverted U-shaped relationship between diversification and reliance on accounting performance measure. With this regard, budgetary control may be perceived as limiting these innovative activities. Therefore,

H_3 : An inverted U-shaped relationship exist between diversification and reliance on accounting performance measure

As been previously highlighted, corporate managers of the highly diversified firms were at a disadvantage to detect the slack as they may not possess enough resources to monitor and control the distinct businesses (Stede 2001). On the other hand, Chenhall (2003) maintained that use of budgets may limit the innovation and flexibility in structuring organizations and therefore slack creation activities will be perceived as one way to boost for innovativeness and creativeness behaviors. Stede (2001) reiterate that corporate may let the slack exist in business units to minimize the information overload to be processed at the corporate. However, slack declines are likely to be seen at a higher level of diversification, since more infomal communication may takes place and this could increase managerial honesty, i.e. less slack (Newman, 2014). Furthermore, since diversified firms have large resource, managers might be less impelled to create slack (George 2005). Therefore, we hypothesize:

H_4 : An inverted U-Shaped relationship exist between diversification and budgetary slack

2.3. Reliance on Accounting Performance Measure and budgetary slack

Reliance on Accounting Performance Measures (hereafter, RAPM) perhaps, one of few areas in management accounting that has attracted considerable attention and has called a fruitful area for academic inquiry. The attention, for a large part, was directed at the identification of its conceptualizations and rectifying its components. Nevertheless, single, widely-accepted conceptualizations of RAPM was not robustly developed and tend to base on loose-fitting conceptualizations (Hansen &Stede, 2004; Hansen et al. 2003; Stede, 2003).

In their seminal work, Anthony and Govindarajan (2006) describe RAPM as part of the control mechanism in which the superior is solely use the accounting and budgetary figures to evaluate the managerial performance. The proposed conceptualization is related to the extent of emphasis placed by the superior to its subordinate on attaining the budget target or the details in the budget reviews. Several other authors provide different conceptualizations, particularly with regard to inferring RAPM from its outcome (Merchant, 1985) who considers high RAPM if it has a greater effect on decision making.

Although the effect of reliance on accounting performance measure has been mixed and inconclusive (kindly contrast the pioneering works of Hopwood (1972) and Otley (1978), and the following researches afterwards), it is evident that missing the budget targets may lead negative consequences such as corporate intervention, loss of bonuses and remuneration, etc (Stede, 2001). Thus, managers may do their best to meet the budget target. However, looking from the control system point of view, the intensified control system may always lead to intended behavior. Therefore, it is likely that:

H_5 : Higher reliance on accounting performance measure will decrease the presence of budgetary slack

3. METHODOLOGY

3.1. Research Design

In order to examine the relationships of diversification, business unit strategy, reliance on accounting performance measure and budgetary slack, we conduct a survey of manufacturing firms in Indonesia. Back to back translations were conducted in developing the instruments. The original questionnaires were in English and then translated into Indonesian Language. We then asked three (3) independent post-graduate students to re-translate the Indonesian questionnaires into English. Deviations were identified and adjusted in order to put the misinterpretation of the original questionnaires to an end. Test and re-test were embarked to the 30 managers and graduate business school students that had similar practical contact with this setting of study. Some minor revisions were made in this stage. The final questionnaires were bilingual, using both English and *Bahasa Indonesia*. Respondents are business unit middle level managers that held responsible directly to the general manager of the particular units. 900 postage paid return envelopes were provided to assure anonymity. Only manufacturing business units with more than 2 "*peers*" were selected since companies with less than 2 subsidiaries cannot interpret the tightness of controls from the corporate point of view.

Table 1: Distribution of respondents by activity sectors

Activity sectors	Respondents	Percents
Food and beverages	33	32.67
Textile mill products	20	19.80
Plastic and glass products	23	22.77
Metal and allied products	14	13.86
Consumer goods	11	10.90
Total	101	100

3.2. Variables Measurement

Budgetary Slack

Current study conceptualizes budgetary slack as a managerial intention to set the budget target at his/her optimum capacity to make the budget easier to achieve (Lukka, 1988). This 5 items measurement was originally measured by Dunk (1993) and was adopted by prior researchers (Stede's, 2000; 2001) using Likert scale.

Table 2: Descriptive Statistics

Manifest Variables	Theoretical Range		Actual Range		Mean	Std. Dev.
	Min	Max	Min	Max		
S1	1	5	1.00	5.00	3.4455	1.13556
S2	1	5	1.00	5.00	3.8119	1.17229
S3	1	5	1.00	5.00	3.9604	1.08555
S4	1	5	1.00	5.00	3.9010	1.08171
S5	1	5	1.00	5.00	3.7426	1.18873
SLK1	1	5	1.00	5.00	4.2574	1.01640
SLK2	1	5	1.00	5.00	3.6535	1.36701
SLK3	1	5	1.00	5.00	3.8713	1.25430
SLK4	1	5	1.00	5.00	4.2871	1.09851
SLK5	1	5	1.00	5.00	4.0891	1.24979
E1	1	5	1.00	5.00	3.6733	1.25785
E2	1	5	1.00	5.00	3.9307	1.18539
E3	1	5	1.00	5.00	4.0099	1.26091
E4	1	5	1.00	5.00	3.9505	1.09887
E5	1	5	1.00	5.00	3.8911	1.22394
E6	1	5	1.00	5.00	4.0396	1.28779
E7	1	5	1.00	5.00	3.8218	1.27590
DIVERS	2	∞	2.00	19.00	5.6634	4.64172

Business Unit Strategy

The business unit strategy was measured by defenders-prospectors typology of Miles and Snow (1978) consisting five indicators (CS1 to CS5) for several reasons: first, it is well documented and Prospectors/Defenders-type firms exhibit similar characteristic to strategy identified by Porter

(1980) Cost-leadership/Differentiation, Mintzber's (1973) entrepreneurial and planning mode firms, and Miller and Friesen's (1978) innovators and dominant firms. Second, Miles and Snow also are clearly stated that the firms' strategy should be in line with their control systems. Third, the typology has been tested in many management accounting studies across diverse industries. For this measurement, respondents were asked to indicate selling price, R&D expenses, product quality, product features and brand image relative to their competitors on a five point scale from significantly lower to higher. Lower score indicates a defender-like company and higher score indicates a prospector-like company.

Diversification

We use the number of separate business units in each company to measure diversification. Each business units has to be controlled, weighted by their relative common shares with a minimum of 50% common shares by corporate.

Budgetary controls (RAPM)

Reliance on accounting performance measures in this study was defined as the way in which superiors emphasize the use of accounting numbers as performance criteria and budget targets (Harrison 1993). The construct consist of seven items (CE1 to CE7) adapted from Stede (2000, 2001) on 5 items Likert's scale.

Table 3: Pearson's correlations between manifest variables

	S1	S2	S3	S4	S5	SLK1	SLK2	SLK3	SLK4	SLK5	E1	E2	E3	E4	E5	E6	E7	DIV
S1	1,00																	
S2	0,42	1,00																
S3	0,22	0,43	1,00															
S4	0,28	0,22	0,45	1,00														
S5	0,23	0,22	0,48	0,36	1,00													
SLK1	0,39	0,41	0,39	0,19	0,22	1,00												
SLK2	0,24	0,35	0,32	0,22	0,28	0,27	1,00											
SLK3	0,10	0,33	0,42	0,24	0,29	0,30	0,83	1,00										
SLK4	0,32	0,39	0,52	0,29	0,29	0,76	0,34	0,46	1,00									
SLK5	0,37	0,38	0,45	0,24	0,48	0,64	0,40	0,47	0,72	1,00								
E1	-0,12	-0,11	-0,01	-0,10	-0,17	-0,09	-0,20	-0,11	-0,06	-0,13	1,00							
E2	-0,22	-0,18	-0,11	-0,18	-0,26	-0,20	-0,25	-0,22	-0,18	-0,26	0,30	1,00						
E3	-0,12	-0,02	-0,01	-0,01	-0,01	-0,15	-0,24	-0,20	-0,19	-0,26	0,38	0,30	1,00					
E4	-0,06	0,03	-0,03	-0,04	0,00	-0,08	-0,07	-0,13	-0,10	-0,07	0,16	0,34	0,25	1,00				
E5	-0,18	-0,22	-0,10	-0,08	-0,01	-0,13	-0,22	-0,18	-0,11	-0,15	0,30	0,45	0,35	0,29	1,00			
E6	-0,17	-0,02	-0,13	-0,09	-0,11	-0,01	-0,07	-0,13	-0,12	-0,09	0,28	0,40	0,31	0,24	0,21	1,00		
E7	-0,22	-0,06	-0,02	-0,16	-0,12	-0,11	-0,08	-0,08	-0,19	-0,20	0,19	0,38	0,16	0,19	0,34	0,39	1,00	
DIV	0,10	0,13	0,17	0,13	0,20	0,26	0,33	0,37	0,29	0,27	0,07	-0,04	0,07	0,11	0,08	0,14	0,07	1,00
Mean	0,00	0,00	0,00	0,00	0,00	0,00	0,00	0,00	0,00	0,00	0,00	0,00	0,00	0,00	0,00	0,00	0,00	0,00
s.d.	1,13	1,17	1,08	1,08	1,18	1,01	1,36	1,25	1,09	1,24	1,25	1,18	1,26	1,09	1,22	1,28	1,27	4,64

Notes: Non significant correlations (p> .05) are marked with Italic. Correlations are calculated by transformed, mean-centered

3.3. Statistical Analyses

In order to test our theoretical model, current study used polynomial, non-monotonic structural equation modeling. In testing the non-monotonic, polynomial relationships, we adopted anmulti-steps approach recommended by Cohen et al (2003) and Ping (2004, 1995). In the first step, we used the confirmatory factor analysis (CFA) to evaluate assess whether the latent variablesare validly measured by the observed indicators. Second, we also test the "fit" among the hypothesized variables in the structural model. We then create a a single indicator for the quadratic latent variables (x:x) as the $[x_1 + x_2 + \ldots + x_n]^2$, where x_n is the observed variable of n. This study then create the constraint loadings ($\lambda_{x:x}$) by $[\lambda_{x1} + \lambda_{x2} + \ldots + \lambda_n]^2$, whereby $\lambda_x$is the estimated loading from the measurement models and similarly, the measurement errors ($\theta_{x:x}$) are constrained by $[4(\lambda_{x1} + \lambda_{x2} + \ldots + \lambda_n)^2$. VAR(X). $(\theta_{\varepsilon.x1} + \theta_{\varepsilon.x2} + \ldots + \theta_{\varepsilon.xn})$; where VAR(X) is the variance of latent variable X and θ_n is the measurement error of n from the measurment model.

This approach is in line Anderson and Gerbing (1988) in separating the measurement and structural models so that constraint values from the measurement models can be used as fixed values in the following structural model (Ping, 1995). On the other hand, since diversification is measured using single indicator without any observable error, as opposed to latent variable with multiple indicators, the quadratic product of λ, θ are set to 1 and 0, respectively. The structural method employed Maximum Likelihood that required required mean-centered (i.e. $[x_i - \mu_x]$) indicators for both exogenous and endogenous latent variables. The structural relationships can be portrayed as:

$$\eta_1 = \gamma_{1.1}\xi_1 + \gamma_{1.2}\xi_2 + \gamma_{1.3}\xi_3 + \gamma_{1.4}\xi_4 + \zeta_1$$
$$\eta_2 = \beta_{2.1}\eta_1 + \gamma_{2.1}\xi_1 + \gamma_{2.2}\xi_2 + \gamma_{2.3}\xi_3 + \gamma_{2.4}\xi_4 + \zeta_2$$

Where:
$\eta_1\eta_1$= reliance on accounting performance measure (EMPHASIS)
$\eta_2\eta_2$ = budgetary slack (SLACK)
$\xi_1\xi_1$ = Business unit strategy (STRATEGY)
$\xi_2\xi_2$ = Diversification (DIVERS) x_i ^{2}
$\xi_3\xi_3$ = quadratic composite measure of ξ_1 = $\sum_i^n (x)^2$
ξ_4= quadratic measure of ξ_2 $\sum_1^n$
$\zeta_i\zeta_1$ = structural errors, i^{th}
γ and β = estimated coefficients of exogenous and endogenous variables, respectively

Figure 1: Research framework in LISREL notations

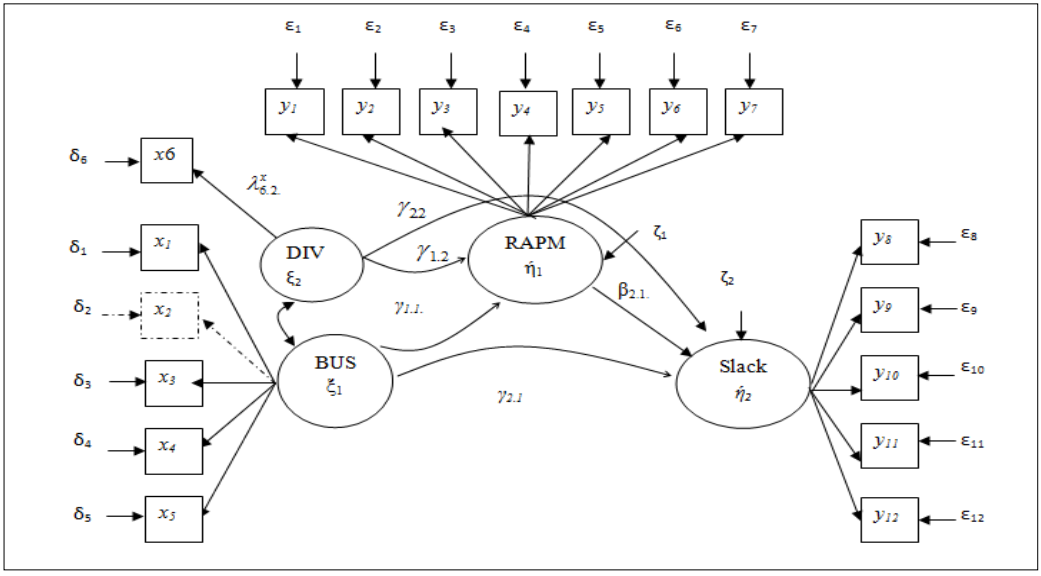

Notes: indicates the unanalyzed path in the structural model because the confirmatory factor analysis showed that this manifest variable have a very low loading. For the purpose of parsimony, the quadratic products of diversification (DIV) and business unit strategy (BUS) are not included. Sign of the non-monotonic relationships were displayed by the shape of the arrow. U-Shaped relationship is visualized as a concave links, and vice versa, inverted U-Shaped relationship is portrayed as a convex.

4. RESULTS

Table 4 displays the results of measurement models of latent variables employed in this study. Although initially one indicator of latent variable STRATEGY, namely CS2, was dropped due to very low standardized loadings. Composite reliability was greater than .6 for each constructs. As been recommended by Fornell and Larker (1981), the variance extracted estimates for the latent variables exceeded the minimum level of .5. Root Mean Square Error Approximation (RMSEA) of three latent variables range from 0.00 to 0.01 indicates a satisfactory fit. GFI (Goodness of Fit Index) and CFI (Comparative Fit Index), as "an estimation of noncentrality parameter to measure the difference between statistic and its associated degrees of freedom to measure whether the model is misspecified" (Kaplan, 2000, p. 108-109, emphasis added), range from 0.97 to 1 indicating almost perfect fit.

Table 4: Measurement Model Estimation

Manifest variables	Loadings	Error variances	R^2
CS1	0.41(0.13)*	1.13 (0.17)*	0.13
CS3	0.81 (0.12)*	0.54 (0.15)*	0.55
CS4	0.67 (0.12)*	0.74 (0.14)*	0.38
CS5	0.75 (0.13)*	0.86 (0.17)*	0.40
Fit Indices	χ^2=1.35, *df=2; p*=.51, RMSEA=.00; GFI=.99; CFI = 1		
CE1	0.60 (0.14)*	1.22 (0.19)*	0.23
CE2	0.84 (0.12)*	0.72 (0.15)*	0.50
CE3	0.65 (0.14)*	1.18 (0.19)*	0.26
CE4	0.49 (0.12)*	0.96 (0.15)*	0.20
CE5	0.75 (0.13)*	0.94 (0.16)*	0.38
CE6	0.71 (0.14)*	1.16 (0.19)*	0.31
CE7	0.68 (0.14)*	1.18 (0.19)*	0.28
Fit Indices	χ^2=14.75, *df*=14; *p*= .40; RMSEA=.0071; GFI=.96; CFI=1		
CSLK1	0.83 (0.09)*	0.35 (0.07)*	0.66
CSLK2	0.55 (0.14)*	1.56 (0.23)*	0.16
CSLK3	0.63 (0.12)*	1.19 (0.17)*	0.25
CSLK4	1.03 (0.09)*	0.15 (0.07)**	0.87
CSLK5	0.98 (0.11)*	0.61 (0.11)*	0.61
Fit Indices	χ^2 = 9.24; *df* = 4; *p*=0.055; RMSEA=0.01; GFI=0.97; CFI=0.98		

Notes: a) standard errors are in parentheses; * significant at 0.01, ** significant at 0.05.

b) CS2 was dropped due to lack of reliability and convergent validity. This inclusion led to the decreased $\chi^2$by 12.32 and $p < .01$

Turning to table 5, it is found that the hypothesized model yielded χ^2 value 222.10 with 144 *df* and *p* value < 0.01, which indicate that the model does not fit well with the data. However, many researchers have warned the problems associated with χ^2 statistic and its *p*-value (Joreskog and Sorbom 1993, MacCallum 1986) with regard to its sensitivity to sample size and model complexity. Thus, rather than solely rely on χ^2, many fit indices are used to examine the feasibility of the model. Root Mean Square Error Approximation (RMSEA), as "one of the most informative criteria in the structural equation modeling" (Byrne, 1998, p. 112), yielded a value of .063 represent a reasonable errors of approximation in the population and mediocre fit. Comparative Fit Index (CFI) and Incremental Fit Index (IFI) are each .93 reflecting a well-fitting model. Goodness of Fit Index (GFI) value of 0.92 reflects that the hypothesized model fits the sample data fairly well.

Table 5: Structural Model Estimation

Path from	To	Loadings	Errors	R^2
STRATEGY ($\gamma_{1.1}$)		-0.42 (0.15)*		
DIVERS ($\gamma_{1.2}$)		0.047 (0.024)**	0.65 (0.29)**	0.35
STRATEGY SQUARED ($\gamma_{1..3}$)	EMPHASIS	-0.072 0(.033)**		
DIVERS SQUARED ($\gamma_{1.4}$)		0.0051(0.0023)**		
STRATGY ($\gamma_{2.1}$)$\gamma_{2.1}$		0.26 (0.13)**		
DIVERS ($\gamma_{2.2}$)	SLACK	0.091(0.024)*		
EMPHASIS ($\beta_{2.1}\beta_{2.1}$)		-0.41 (0.18)**	0.50 (0.16)*	0.50
STRATEGY SQUARED ($\gamma_{2.3}$)		-0.097 (0.030)*		
DIVERS SQUARED ($\gamma_{2.4}$)		0.0062 (0.0023)*		
χ^2 (p)				222.10 (.00)
Df	144			
χ^2/df	1.542			
RMSEA	0.063			
CFI	0.93			
IFI	0.93			
GFI	0.82			
ECVI < saturated < independence model				2.95 < 3.84 <12.63
CAIC < saturated < independence model				458.35 < 1064.98 < 1319.02

Notes: a) standard errors are in parantheses; * significant at .01, ** significant at .05

It is apparent from table 5 that that prospector like companies put less emphasis on budget target ($\gamma_{1.1}$= $\gamma_{1.1}$ =-.42, p< 0.01). Interestingly, the expected U-shaped relationship in H_1 between strategy and budget emphasis is not likely to exist. Rather this relationship is concave downward or inverted U-shaped ($\gamma_{1.3}\gamma_{1.3}$=-0.072; p < 0.01). Furthermore, defender-like strategy is likely to have less slack in their business unit, and this is also true for its counterpart; prospector-like strategy ($\gamma_{2.1}\gamma_{2.1}$=.26; p<.05). However, closer observation indicate that the relationship between business unit strategy and budgetary slack is not linear, but rather appears as inverted U-shaped ($\gamma_{2.3}\gamma_{2.3}$ = -0.097; p <0.01), as in H_2. Indeed, the negative relationship on the linear relationship between strategy and slack is strong and evident, but only after the "peak point" of strategic actions (which is the case of defender). Before that, the presence of slack will increase as the level of the innovativeness and risk taking (which is the case of prospector) also increase. Thus, it can be said that the presence of slack will be lowest when the business units engage in one strict strategy; either defender or prospector. As the business units decide to mix both the strategy typology (e.g. choose low cost price as in defender, but on the other hand, focusing on a particular market segment as is the case of prospector) or "stuck in the middle", they may need more buffer to choke for uncertainty on terms of slack creation. Figure 2 and 3 visualize the relationships clearly.

On the other hand, more diversified firms put more reliance on accounting performance measures ($\gamma_{1.2}\gamma_{1.2}$ = 0.047; p< 0.05). However, a U-Shaped relationship is exist ($\gamma_{1.4}\gamma_{1.4}$=0.0051; p< 0.05). Moreover, business units with more "peers" tend to have more slack in their budget ($\gamma_{2.2}\gamma_{2.2}$ = 0.091; p <0.01). Nevertheless, this relationship does not go indefinitely. As corporate choose to diversified, the presence of slack will increase and peak, and after some point, the presence of slack will decrease as the number of diversified firms increase. With regard to the effect of reliance on accounting performance measure on budgetary slack, the relationship is negatively expected ($\beta_{2.1}$ = -0.41; p<0.05).

Figure 2: Simultaneous inverted U-Shaped relationships between strategy, emphasis and budgetary slack

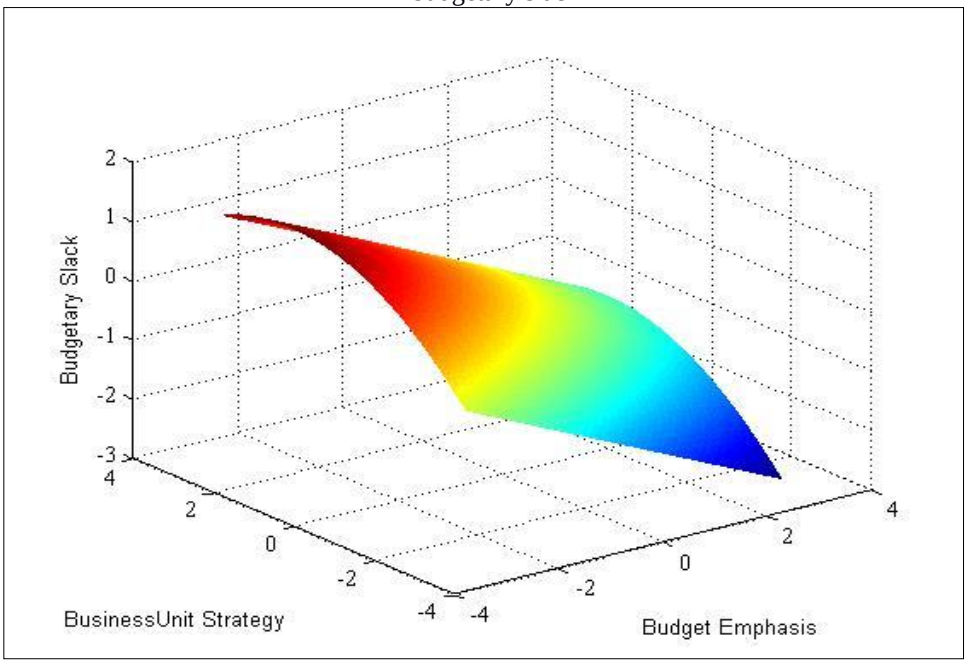

5. DISCUSSION

The results of the study provide supports for the hypothesized U-Shaped relationships between environmental characteristics (e.g. strategy and diversification) and budget-related behavior (reliance on accounting performance measures and budgetary slack). We found an unanticipated result with regards to H1. Rather than finding a U-shaped relationship between strategy and budget emphasis, this study found an inverse U-Shaped relationship. Several speculations seem to be attractive, though. First, since the success factors of Prospectors tends to be long term in nature and difficult to quantify precisely, reliance on accounting performance measure becomes less suitable and obsolete (Stede, 2000, 2001). On the other hand, defenders may also relax for budget emphasis. Given that defenders typically operate in the cybernetic model (Davila, 2005), it is

predictable therefore, that budget emphasis reduce the innovation and change, and thus there is less need to put into account the importance of budget as formal control.

As expected, it is apparent that the relationship between strategy and slack creation activity is concave upward. As been argued by Nohria and Gulati (1996), slack will increase when firms have the riskier projects or investments. There is a limit to this positive relation, however. The needs to create slack will be reduced when the number of riskier projects go beyond the optimal level. On the other hand, it is likely that the relationship between diversification and budget emphasis is U-Shaped (concave downward), as expected. It is likely that as the number of entities controlled by the corporate increase, use of accounting performance measure may not be sufficient as the diversified firms deal with high uncertainty and focusing more on the way the firms adapt to their environment and creating innovative investments. (Francis et al. 2004). One way to choke for uncertainty and facilitate the innovativeness and risk-taking activities is through relaxing the importance of control on budget target (i.e. loose budget emphasis) (Martinez and Artz 2006). However, as the number of diversified firms remains increase, use of accounting performance measures may be enhanced because direct monitoring activities will become lax. In this vein, reliance on accounting numbers as monitoring and control tools are sufficient and needed.

Figure 3: Simultaneous U-Shaped relationships between diversification, emphasis and budgetary slack

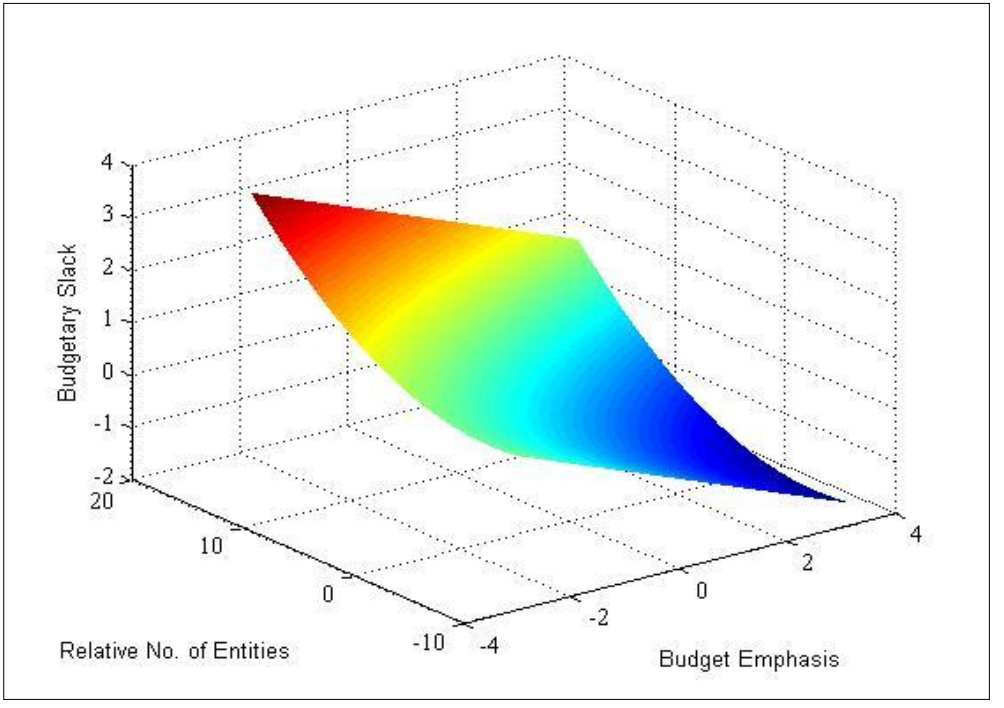

Surprisingly, it is coined that the effect of diversification on slack creation is concave downward, rather than the postulated inverted U-Shaped relationship (concave upward). It is clear that more

diversified firms, to some extent, have less slack but as the number of entities being controlled by corporate increase the presence slack in business units' budget increase. This unexpected finding can be simply explained by the nature of diversified firms. As the number of entities being controlled is relatively higher, the corporate may not be in a position to detect the slack creation. However, it does not mean that corporate cannot always detect the presence of slack in business units' budget (Campbell et al. 1995). As the number of business units' increase, the corporate may let the slack exist in the business as a strategy to shift the focus at the business unit level. With regard to the effect of reliance on accounting performance measure on budgetary slack, it is found that the negative relationship is likely to exist. This finding is inline with economists (Williamson 1964, Jensen and Meckling, 1976) that tight control systems may increase the possibility that slack is detected and reduced.

6. CONCLUSION

The arguments and results of the study help resolve the debate between those who say that strategy and diversification encourages reliance on accounting performance measure and facilitates slack creation and those who suggest that strategy and diversification inhibits RAPM and discourage slack engagement in a budgetary process. The middle ground that we advocate – that strategy and diversification have U-shaped effects on RAPM and budgetary slack – provides a way out of this intractable, unsolved debate.

As always, there are inherent limitations in this study that should be considered. The analysis involves only a relatively small proportion of all manufacturing organizations in Indonesia, and there may be some response bias. A purposive random sampling was used in this study to maximize the generalizability of the results. However, the low response rate should be taken into account that may impact on the generalizability. Furthermore, the usable sample size is 101, which is regarded as an adequate, but not generous size for a stable structural equations approach. In addition, the study was conducted upon two differ characteristics of firms: publicly-held and non-publicly held firms. The regulations attached to them may affect the relationships that could impair the results of the study. Further studies should consider the limitations above. It is also fruitful to examine the impact of environmental factors (e.g. market intensity and volatility) on the determinants of budgetary slack.

REFERENCES

Andrews, K. R. (1980). The Concept of Corporate Strategy, Homewood, IL: Richard D. Irwin.

Anthony, R. N., & Govindarajan, V. (2006) Management Control Systems. McGrawHill Higher Education

Bourgeois, L. J. (1981). On the measurement of organizational slack. *Academy of Management Review*, *6*(1), 29-39

Bruns, W. J.,& Waterhouse, J. H. (1975). Budgetary control and organizational structure. *Journal of Accounting Research*, Autumn, 177-203

Byrne, B. M. (1998). *Structural equation modeling with LISREL, PRELIS and SIMPLIS: basic concepts, applications and programming*. New Jersey: Lawrence Erlbaum Associates

Campbell, A., Goold, M., & Alexander, M. (1995). Corporate strategy: The quest for parenting advantage. *Harvard Business Review*, March-April, 120-32

Cheng, J. L., & Kessner, I. (1997). Organizational slack and response to environmental shifts: The impact of resource allocation pattern. *Journal of Management,23*(1), 1-18

Chen, C. J., & Huang, Y. F. (2010) Creative workforce density, organizational slack, and innovation performance. *Journal of Business Research,63*(4), 411 - 417

Chen, Y. M., Yang , D. H., & Lin, F. J. (2013). Does technological diversification matter to firm performance? The moderating role of organizational slack. *Journal of Business Research*, *66*(10), 1970 - 1975

Chenhall, R. H. (2003). Management control systems design within its organizational context: Findings from contingency-based research and directions for the future. *Accounting, Organization and Society,28*(2-3), 127 – 168

Chenhall, R. H. (2005). Content and process approaches to studying strategy and management control, in Chapman, C. (ed.). *Controlling strategy: management, accounting and performance*. Oxford: Oxford University Press.

Cohen, J., Cohen, P., West, S. G.,& Aiken, L. S. (2003). Applied multiple regression/correlation analysis for the behavioral sciences. New Jersey: Lawrence Erlbaum Associates

Cyert, R. M., & March, J. G. (1963). *A behavioral theory of the firm*. Englewood Cliffs, NJ: Prentice Hall

Davila, T. (2005). The promise of management control systems for innovation and strategic change, in Chapman, C. (ed.). *Controlling strategy: management, accounting and performance*. Oxford: Oxford University Press.

Davis, S., DeZoort, F. T.,& Kopp. L. S. (2006). The effect of obedience pressure and perceived responsibility on management accountants' creation of budgetary slack. *Behavioral Research in Accounting*,18, 19-35

Dent, J. F. (1990). Strategy, organization and control: some possibilities for accounting research. *Accounting, Organization and Society,15*(1-2), 3-25

Dunk, A. S. (1993). The effects of budget emphasis and information asymmetry on the relations between budgetary participation and budgetary slack. *The Accounting Review*, *12*(2), 400-410

Dunk, A. S. (2011). Product innovation, budgetary control, and financial performance of firms. *The British Accounting Review*, *43*(2), 102 – 111

Dunk, A., & Nouri, H. (1998). Antecedents of budgetary slack: A literature review and synthesis. *Journal of Accounting Literature*,17, 72-96

Elmassri, M., & Harris, E. (2011). Rethinking budgetary slack as budget risk management. *Journal of Applied Accounting Research*, *12*(3), 278-293

Francis, D., Lohrke, F. T., Fornaciari, C. J., & Turner, R. A. (2004). Slack resources and firm performance: A meta analysis. *Journal of Business Research, 57*(6), 565-74

Fornell, C., & Larcker, D. F. (1981). Evaluating structural equation modeling with observable variables and measurement error. *Journal of Marketing Research,18*(1) 39-50

Geiger, S. W., & Gashen, L .H. (2002). A multidimensional examination of slack and its impact on innovation. *Journal of Managerial issues, 14*(1), 68-84

George, G. (2005). Slack resources and the performance of privately held firms. *Academy of Management Journal*, *48*(4), 661-76

Govindarajan, V. (1988). A contingency approach to strategy implementation at the business unit level: Integrating administrative mechanisms with strategy. *Academy of Management Journal,31*(4), 828-853

Greve, H. R. (2003). A Behavioral theory of R&D Expenditures and innovations: Evidence from shipbuilding. *Academy of Management Journal,46*(6), 685-703

Hansen, S. C., & Stede, W. A. V. (2004). Multiple facets of budgeting: an exploratory analysis. *Management Accounting Research, 15*(4), 415-439.

Hansen, S. C., Otley, D. T., & Stede, W. A. V. (2003). Practice developments in budgeting: an overview and research perspective. *Journal of Management Accounting Research, 15*(1), 95-116.

Harrison, G. L. (1993). Reliance on accounting performance measures in superior evaluation style-the influence of national culture and personality. *Accounting, Organization and Society,18*(4), 319-339

Hartmann, F. G. H., & Maas, V. S., (2010). Why business units controllers create budget slack: involvement in management, social pressure and machiavellianism. *Behavioral Research in Accounting, 22*(2), 27 – 49

Herold, D. M., Jayaraman, N., & Narayanaswamy, C. R. (2006). What is the relationship between organizational slack and innovation.*Journal of Managerial Issues, 18*(3), 372-92

Hopwood, A. G. (1972). An empirical study of the role of accounting data in performance evaluation. *Journal of Accounting Research*, Supplementary, 156-182

Huang, J. W., & Li, Y. H. (2012). Slack resources in team learning and project performance. *Journal of Business Research*, *65*(3), 381 – 388

Jensen, M. C. (1986). Agency costs of free cash flow, corporate finance and takeover. *American Economic Review, 76(*2), 323-329

Jensen, M. C. (1993). The modern industrial revolution, exit and the failure of internal control systems. *Journal of Finance, 48*(3), 831-880

Jensen, M. C., & Meckling, W. H. (1976). Theory of the firm: Managerial behavior, agency cost and ownership structure. *Journal of Financial Economics,3*(4), 305-60

Joreskog, K. G.,& Sorbom, D. (1993). LISREL 8: User's reference guide. Chicago: Scientific Software International, Inc.

Kaplan, D. (2000). Structural equation modeling: foundations and extensions. London: Sage Publications.

Kaplan, R., & Norton, D. P. (2008). The execution premium: Linking Strategies to Operations for Competitive Advantage. Boston: Harvard Business School Publishing Corporation

Kihn, L. A. (2011). How do controllers and managers interpret budget targets? *Journal of Accounting and Organizational Change*, *7*(3), 212 – 236

Langfield-Smith, K. (1997). Management control systems and strategy: A critical review, *22*(2), 207-232

Langevin, P., & Mendoza, C. (2013). How can management control system fairness reduce manager's unethical behaviours? *European Management Journal, 31*(3), *209, 222*

Lau, C. M. (1999). The effect of emphasis on tight budget targets and cost control on production and marketing managers' propensity to create slack. *British Accounting Review, 31*(4), 415-437

Lawson, M. B. (2001). In praise of slack: time is of the essence. *Academy of Management Executive, 15*(3), 125-35

Linn, G., Casey, K. M., Johnson, G. H., & Ellin, T. S. (2001). Do broad scope managerial accounting systems moderate the effects of budget emphasis, budget participation and perceived environmental uncertainty on the propensity to create budgetary slack?.*The Journal of Computer Information Systems, 42*(1), 90-96

Love, E. G., & Nohria, N. (2005). Reducing slack: The performance consequences of downsizing by large industrial firms, 1977-93. *Strategic Management Journal, 26*(12), 1087-108

Lukka, K. (1988). Budgetary biasing in organizations: theoretical framework and empirical evidence. *Accounting, Organization and Society,13*(3), 281-301

MacCallum, R. C. (1986). Specification searches in covariance structure modeling. *Psychological Bulletin,100*(1), 107-20

Mariadoss, B. J., Johnson, J. L., & Martin, K. D. (2014). Strategic intent and performance: the role of resource allocation decisions. *Journal of Busines research*, *67*(11), 2393-2402

Martinez, R. J., & Artz, K. (2006). An Examination of firm slack and risk taking in regulated and deregulated airlines. *Journal of Managerial Issues, 18*(1), 11-31

Mellahi, K., & Wilkinson, A. (2010). A study of the association between level of slack reduction following downsizing and innovation output. *Journal of Management Studies,47*(3), 483-508

Merchant, K. A. (1981). The design of the corporate budgeting system: Influences on managerial behavior and performance. The Accounting Review, *56*(October), 813-29.

Merchant, K. A. (1985). Budgeting and the propensity to create budgetary slack. *Accounting, Organization and Society,10*(2), 201-210

Mintzber, H. (1973). Strategy making in three modes. *California Management Review*, *16*(2), 44-53

Miles, R. W. and Snow, C. C. (1978). *Organizational Strategy, Structure and Process*. New York: McGraw Hill

Miller, D., & Friesen, P. H. (1978). Archetypes of strategy formulation. *Management Science*, 24, 973-948

Newman, A. H. (2014). An investigation of how the informal communication of firm preferences influences managerial honesty. *Accounting, Organizations and Society*, *39*(3), 195-207

Nohria, N., & Gulati, R. (1996). Is slack good or bad for innovation?.*Academy of Management Journal*, *39*(5), 1245-64

O'Brien, J. P. (2003). The capital structure implications of pursuing a strategy of innovation. *Strategic Management Journal*, *24*(5), 415-32

Otley, D. T. (1978). Budget use and managerial performance. *Journal of Accounting Research*, 16, Spring, 122-149

Ping, R. A. (1995). A parsimonious estimating technique for interactin and quadratic latent variables. *Journal of Marketing Research,32*(3), 336-47

Ping, R. A. (2004). Testing latent variable models with survey data, 2nd edition. http://www.wright.edu/~robert.ping/lv1/toc1.htm

Porter, M. E. (1980). *Competitive Strategy*: *Techniques for analyzing Industries and Competitors*. New York: Free Press

Porter, M. A. (1985). *Competitive advantage*. New York: Free press

Sidhu, J. S., Commandeur, H.R.,& Volberda, H.W. (2003). Measuring exploration orientation and its impact on innovation. *Academy of Management Proceedings*: D1-D7

Simons, R. (1987). The role of management control systems and business strategy: An empirical analysis. *Accounting, Organization and Society*, *12*(4), 357-374

Simons, R. (1988). Analysis of the organizational characteristics related to tight budget goals. *Contemporary Accounting Research,5*(1), 267-283

Stede, W. A. V. (2001). The effect of corporate diversification and business unit strategy on the presence of slack in business unit budgets. *Accounting, Auditing, and Accountability Journals,14*(1), 30-52

Stede, W. A. V. (2000). The relationship between two consequences of budgetary controls: budgetary slack creation and managerial short term orientation. *Accounting, Organization and Society,25*(6), 609 – 622

Webb, R. A. (2002). The impact of reputation and variance investigations on the creation of budget slack. *Accounting, Organization and Society,27*(4-5), 361-78

Williamson, O. E. (1964). The economics of discretionary behavior: managerial objectives in a theory of the firm. Engelwood Cliffs, NJ: Prentice Hall

Yasai-Ardekani, M. (1986). Structural adaptations to environments. *Academy of Management Review,11*(1), 9-21

Yang, M. L., Wang, A. M. L., & Cheng, K. C. (2009). The impact of quality of IS information and budget slack on innovation performance. *Technovation*, *29*(8), 527 - 536

Yuen, D. C. Y. (2004). Goal characteristics, communication and reward systems and managerial propensity to create budgetary slack. *Managerial Auditing Journal,19*(4), 517-532